Acme Sanitary Ware Co Ltd
Acme Building, 22-28 Nanking Street, Kowloon, Hong Kong
Tel: 2388 7171 Fax: 2710 8012
E-mail: acme@acmesanitary.com.hk
Website: www. acmesanitaryware.com.hk

GROHE Pure Freude an Wasser

PROJECT		REF		REV	ITEM CODE	
LOCATION		DATE			PAGE	

SANITARY WARE SPECIFICATION SHEET

Item Descriptions	GROHE (Germany) "Eurodisc Cosmopolitan" Chrome plated single-lever basin mixer S-Size
Dimensions	L116 x W50 x H205 mm
Model	33190002
Finish / Material	Chrome Plated
Country of origin	Germany
Manufacturer	GROHE Limited
Supplier	Acme Sanitary Ware Co. Ltd Mr. Eric Wong/ Mr. Don Yuen
Contact Tel/Fax	(852) 2388-7171 / (852) 2710-8012
E-mail	acme@acmesanitary.com.hk
Website	www.acmesanitary.com.hk

Illustration/ Drawing

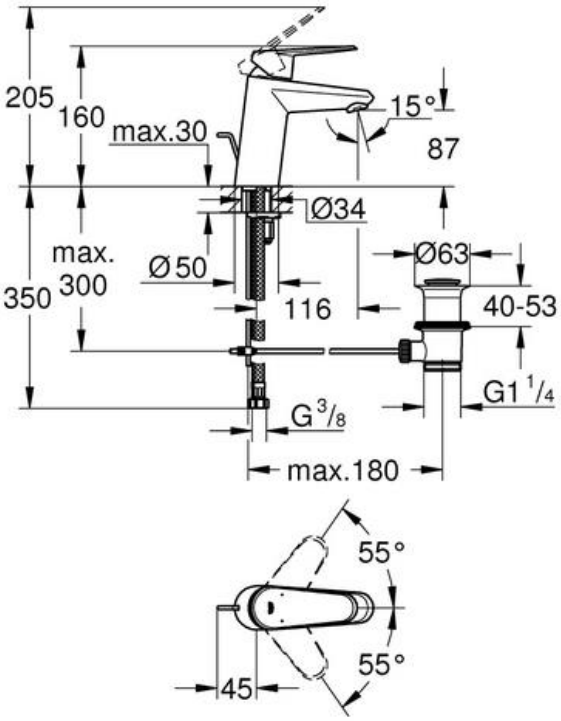

"Eurodisc Cosmopolitan"
Single-lever basin mixer S-Size

- single hole installation
- metal lever
- **GROHE SilkMove** 35 mm ceramic cartridge
- adjustable flow rate limiter
- adjustable minimum flow rate approx. 2.5 l/min
- **GROHE StarLight** chrome finish
- **GROHE QuickFix** Plus installation system with centering support
- mousseur
- pop-up waste set 1 1/4"
- flexible connection hoses
- optional temperature limiter ref. no. 46 375 000
- acoustic group I in accordance with DIN 4109

Note: YouTube (Unboxing 33190002) https://www.youtube.com/watch?v=dDi9o7kWJqg

** All information of the above is for the reference only. No prior notice is made if any changes.*

Acme Sanitary Ware Co Ltd
Acme Building, 22-28 Nanking Street, Kowloon, Hong Kong
Tel: 2388 7171 Fax: 2710 8012
E-mail: acme@acmesanitary.com.hk
Website: www. acmesanitaryware.com.hk

GROHE Pure Freude an Wasser

PROJECT		REF		REV	ITEM CODE	
LOCATION		DATE			PAGE	

SANITARY WARE SPECIFICATION SHEET

GROHE
EURODISC COSMOPOLITAN

VERSATILE & MEANINGFUL

Confidence across the board. Eurodisc Cosmopolitan fittings stand out as a result of their superior styling and their extensive product range, all boasting the "Made in Germany" seal of quality. This collection allows you infinite creativity in your quest for a personalised bathroom. The sweeping lines of the washbasin faucet allow comfortable, splash-free hand-washing. Refreshingly elegant details and technical sophistication are also available for the shower and bath areas. Single-lever faucets, a complete shower system and a convenient shower caddy are just a few examples. Eurodisc Cosmopolitan turns your bathroom into a comfortable living zone.

GROHE SilkMove cartridge technology for smooth handling

This premium tap comes with a continuously variable water temperature and volume adjustment technology, ensuring effortless lever operation even after years of use.

Easy to clean thanks to the GROHE StarLight chrome coating

Just wipe the tap down with a dry cloth – the ultra smooth surface finish is scratch resistant and ensures a lasting luminous sheen. You'll save plenty of time cleaning while your tap always looks shiny and new.

GROHE QuickFix Plus quick and easy installation in a few simple steps

Save time on the installation of your tap with GROHE QuickFix Plus. Consisting of fewer parts, our new system makes the installation process quicker and easier than ever.

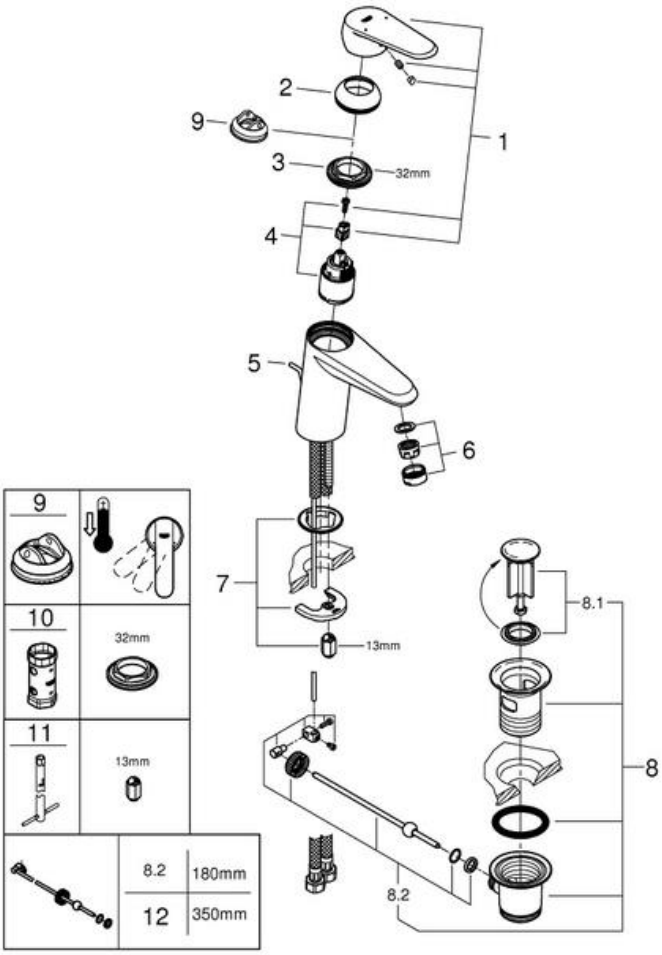

Pos.-nr.	Prod. description	Order-nr.
1	Lever	46738000
2	Cap	46492000
3	Screw coupling	46460000
4	Cartridge	46374000
5	Pop-up rod	46739000
6	Mousseur	13929000
7	Shank mounting kit	46645000
8	Waste set 1 1/4"	28910000
8.1	Plug for waste set 1 1/4"	07182000
8.2	Eccentric rod	07052000
9	Temperature limiter	46375000*
10	Socket spanner	19332000*
11	Mounting wrench	19017000*
12	Ball rod	07341000*

* Optional accessories

Note:

** All information of the above is for the reference only. No prior notice is made if any changes.*